Towards Agentic AI architecture for Scene Perception and Understanding applied to Collaborative Combat

Stéphane Zieba[1], Solène Blasco Lopez[1], Jean-Emmanuel Haugeard[1] {firstname.lastname@thalesgroup.com}

[1] THALES, cortAIx Labs, Palaiseau, FRANCE

Abstract

AI-powered platforms are at the core of collaborative, information-enhanced combat, where adaptability, connectivity, and real-time information sharing are essential for operational superiority. This superiority is crucial, especially in degraded conditions due to highly constrained environments, and must be ensured by building and continuously updating a comprehensive situational awareness for human operators. Agentic AI concepts are discussed here for an application to collaborative combat with adaptability and meaningful control considerations. An architecture is envisioned, ranging from the definition of the agents' capabilities to the components dedicated to multi-agent orchestration and tactical situation assessment.

Keywords

Agentic AI, multimodal scene perception, situational awareness, collaborative combat.

1. Introduction

Information-enhanced collaborative combat highly relies on collaborative platforms integrating artificial intelligence capabilities with new paradigms such as generative and agentic AI. Making platforms autonomous through the use of AI algorithms for perception, decision-making, and action aims to optimize the various stages of the Observe-Orient-Decide-Act (OODA) loop.

The specific context of collaborative combat involves a huge number of heterogeneous units geographically distributed across the battlefield in unstructured and dynamic environments characterized as DDIL (Denied, Degraded, Intermittent & Limited Bandwidth). All these platforms must dynamically manage available resources and system constraints while considering their heterogeneity.

Indeed, the platforms within the system are heterogeneous in terms of nature (UAVs, UGVs, manned vehicles…), sensors (EO/IR cameras, radars, LiDARs…), embedded capabilities, autonomy, and more. Consequently, they are subject to various constraints, such as sensor data quality and nature, available computing power, communication capabilities, and the cognitive state of the operators.

The objective is to dynamically orchestrate agent capabilities while adapting to these constraints to ensure that correct situational awareness is maintained for human operators. Orchestration and adaptation can take various forms, affecting agent input data, internal architecture, and output data formatting. The aim of this work is to propose a generic architecture for agents deployed across various platforms, leveraging the principles and capabilities of agentic AI.

2. Agentic architecture

The proposed approach is centred on the definition of a generic architecture composed of building blocks constituting the core principles of Agentic AI (*FIGURE 1*).

2.1. Skills and knowledge

This block defines the tools and AI algorithms that are available for the agents within the system. These algorithms are used to prove scene analysis capabilities by using AI multi-modal models such as object detection and segmentation, captioning, audio event recognition. Agents shall be able to dynamically broadcast their sensor capabilities so that orchestration agents are able to query available agents in real time.

2.2. Core reasoning and orchestration

This building block is the core agentic architecture in terms of reasoning loops based on reflective properties for improved dynamic orchestration capabilities. The objective is to dynamically build and adapt shared execution plans, according to mission and operators' requirements as well as skills, capacities, constraints and execution monitoring and shared contextual memory. Shared action plans and orchestration aim to facilitates multi-agent coordination to accurately process situation assessment data before executing automated tasking under human authority.

2.3. Continuous monitoring and execution awareness

The objective of this building block is to provide the agents with self-awareness through the monitoring of internal and system constraints, operator constraints, and task execution completion. Such a monitoring aims to trigger reconfigurations of action plans and to request tools and services identified as the most relevant ones based on the situation assessment.

2.4. Global awareness and shared memory

This building block answers to two main objectives. The first one is to design multi-modal embeddings for heterogeneous data fusion (different viewpoints, multi-modality image/text/audio) to provide a global and synthetic situation representation for the human operator. The second is to build common shared memory so that collaborative tracking data and local situation assessments are shared and accessed through structured endpoints.

2.5. Guardrails & autonomy

The objective of this module is crucial when implementing agentic AI paradigm in critical contexts such as collaborative combat. Indeed, human meaningful control shall be guaranteed by bringing explainability to the system. This shall be based on an agents' autonomy formalism based on predicates and symbolic approaches to define autonomy in terms of dynamic capacities and authorizations. These considerations shall be integrated within the agents' reasoning and self-assessments loops to be able to determine required adjustments of the agents' autonomy.

2.6. Human in the loop

All these building blocks shall be designed by considering the human as an agent in the architecture to guarantee

meaningful human control. Control and responsibility shared between AI and human agents shall cover the core capabilities as defined in [1]. These capabilities consist in high-level goals definition, dynamic task allocation, activity monitoring and coordination, adaptive planning and executing, seamless transparent communication.

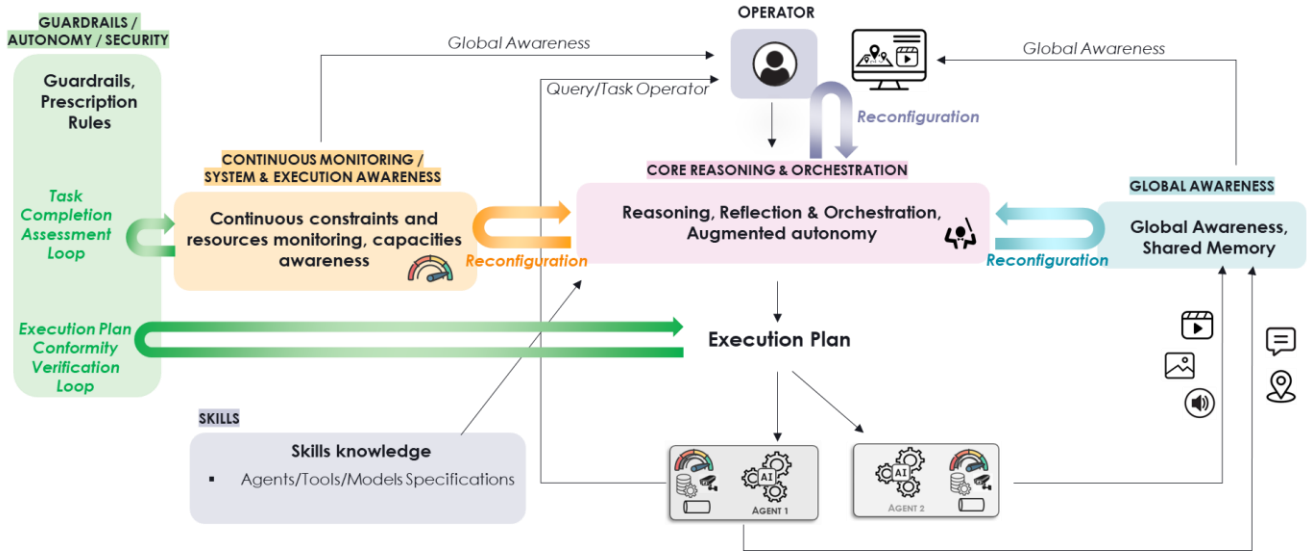

FIGURE 1. Envisioned Agentic AI architecture for adaptive orchestration

3. Illustrative use case for collaborative combat

The foreseen use case aims to detect potential threats with UGVs and UAVs deployed in a natural environment to protect an armed convoy. Threat assessment relies on a set of tools powered by AI algorithms (objects, vehicle detection…). Model Context Protocol (MCP) is a widely used standard in agentic AI that can be used to implement the architecture previously described *(FIGURE 2)*. From a prompt such as « Identify next probable movements of detected enemies", several tools can be queried by the MCP servers which expose the skills of the agents. Efficient tactical situation shall be obtained by coordination and communication between distributed agents. These agents being of different types (UAVs, UGVs…), interoperability is a key feature for agentic AI systems as stated in [2] but is still subject to research with potential refinement of existing standards such as NATO STANAG 4559 on interoperability requirements.

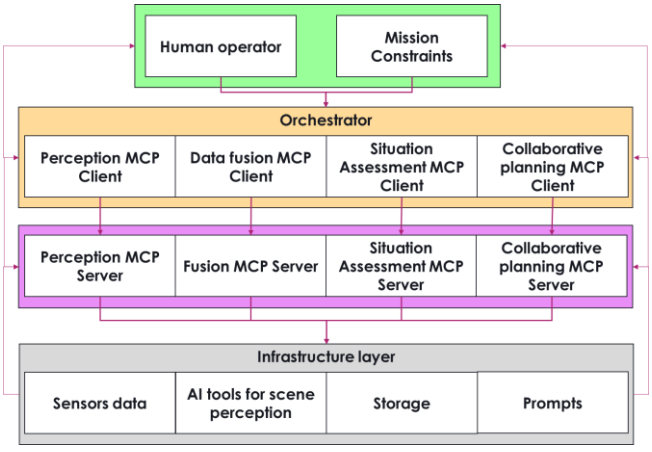

FIGURE 2. MCP architecture oriented for collaborative combat.

Added value of agentic AI lies in the capability to assist human operators at the C2 level by fusing huge quantity of heterogeneous data (topography, weather forecast, vehicles dynamics, doctrine and rules of engagement,). Indeed, from perceived object of interest detected by the AI algorithms, interesting features lie in the ability to infer position of hidden foe units and their expected movements *(FIGURE 3)*.

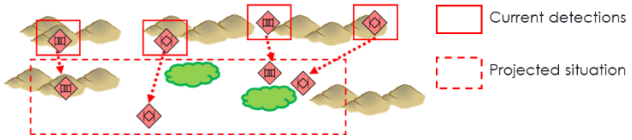

FIGURE 3. Illustration of potential capabilities for future situation assessment.

The proposed approach is to be validated using a laboratory-developed technical demonstrator that combines real drones and ground robots and simulation.

4. Conclusion

This paper illustrated first thoughts about bringing agentic AI into the context of collaborative combat. This represents the first of many steps needed to achieve an interoperable system-of-systems that meets expected requirements for trust, security, and resilience. The objective is to extend such an architecture to multi-layered and multi-domain system, ranging from operational to strategical perspectives.

5. References

[1] Masters, C., Vellanki, A., Shangguan, J., Kultys, B., Gilmore, J., Moore, A., & Albrecht, S. (2025). Orchestrating human-ai teams: the manager agent as a unifying research challenge. In Proceedings of the 2025 7th International Conference on Distributed Artificial Intelligence (pp. 91-107).

[2] Sharma, R., de Vos, M., Chari, P., Raskar, R., & Kermarrec, A. M. (2025). Collaborative agentic AI needs interoperability across ecosystems. arXiv preprint arXiv:2505.21550.